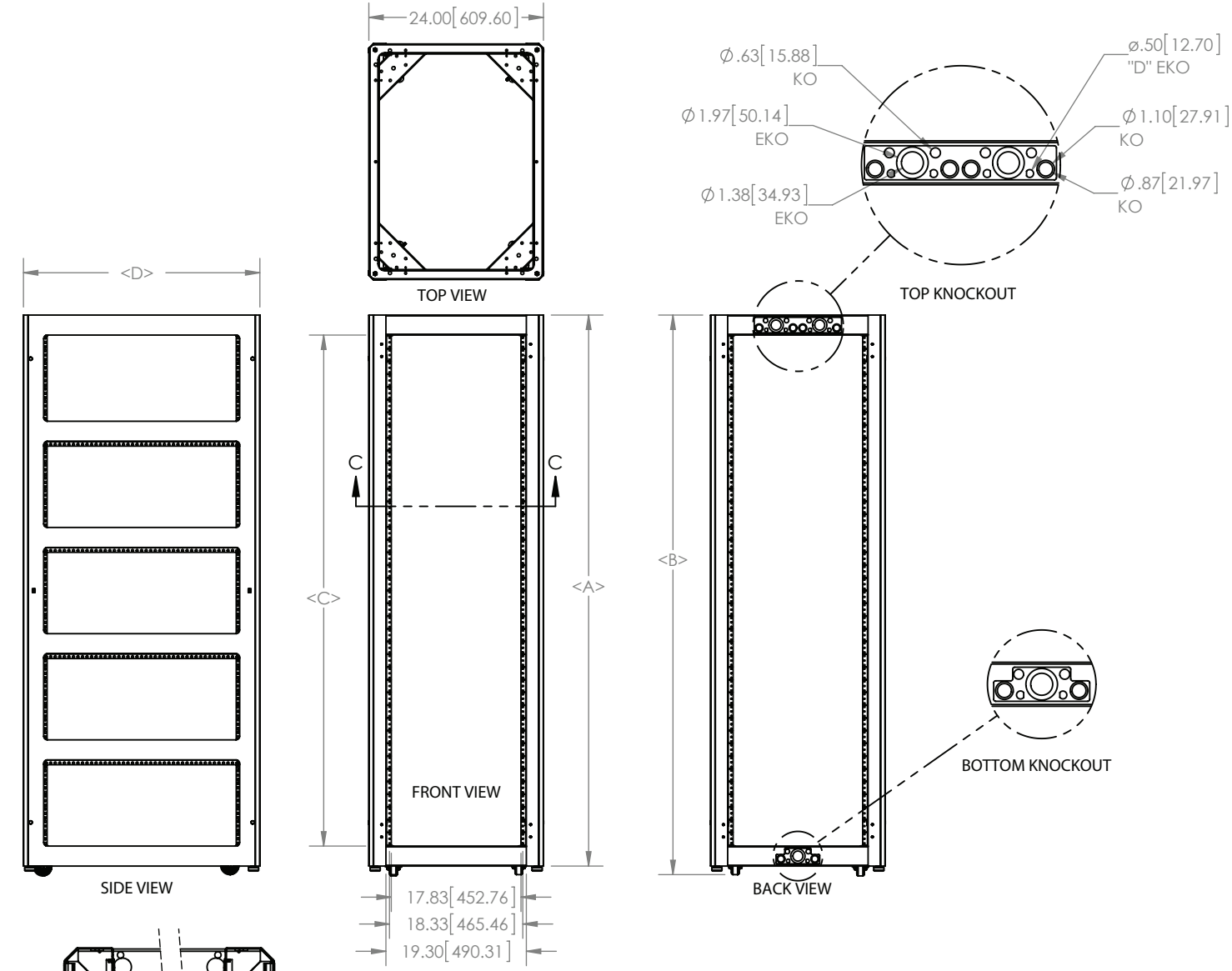

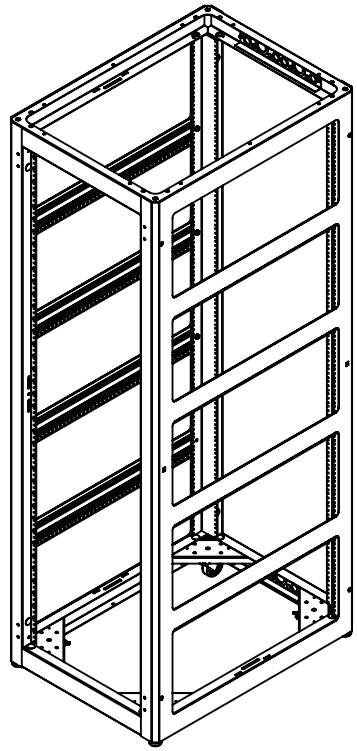

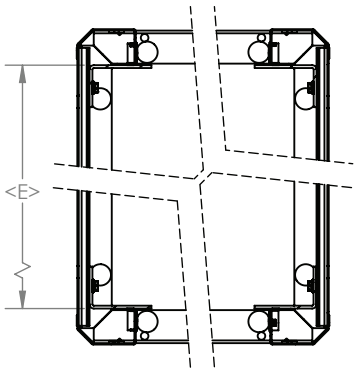

SECTION C-C

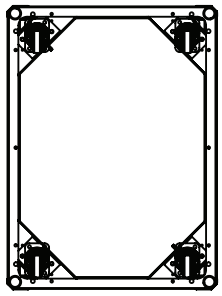

BOTTOM VIEW

PTN BASIC DIMENSIONS					
PART NUMBER	A OVERALL HEIGHT	B HEIGHT W/CASTER	C USABLE HEIGHT	D DEPTH	E USEABLE DEPTH
R-PTN-44U24-325	82.75 [2102]	83.93 [2131.8]	77.25 [1962.2]	32.5 [825.5]	29.5 [749.3]
R-PTN-44U24-275	82.75 [2102]	83.93 [2131.8]	77.25 [1962.2]	27.50 [698.5]	24.5 [622.3]
R-PTN-40U24-325	75.75 [1925]	76.93 [1954]	70.25 [1784.4]	32.5 [825.5]	29.5 [749.3]
R-PTN-40U24-275	75.75 [1925]	76.93 [1954]	70.25 [1784.4]	27.50 [698.5]	24.5 [622.3]
R-PTN-37U24-325	70.50 [1790.7]	71.68 [1820.7]	65.00 [1651]	32.5 [825.5]	29.5 [749.3]
R-PTN-37U24-275	70.50 [1790.7]	71.68 [1820.7]	65.00 [1651]	27.50 [698.5]	24.5 [622.3]
R-PTN-24U24-325	47.75 [1212.9]	48.93 [1242.8]	42.25 [1073.2]	32.5 [825.5]	29.5 [749.3]
R-PTN-24U24-275	47.75 [1212.9]	48.93 [1242.8]	42.25 [1073.2]	27.50 [698.5]	24.5 [622.3]

Note: All dimensions in inches unless otherwise noted [dims in brackets are in mill]